EVERLIGHT ELECTRONICS CO., LTD.

5mm Infrared LED,T-1 3/4

MODEL NO : SIR333

Features :

- High radiant intensity
- Peak wavelength λ p=875nm
- View angle 20°
- High reliability
- Low forward voltage
- Standard T-1$^3/_4$(ϕ 5mm) package

Description :

- EVERLIGHT's Infrared Emitting Diode (SIR333) is a high intensity diode, molded in a blue transparent plastic package.
  The device is spectrally matched with phototransistor, photodiode and infrared receiver module.

Applications :

- Free air transmission system
- Optoelectronic switch
- Infrared remote control units with high power requirement
- Floppy disk drive
- Infrared source for optical counter and card reader

PART NO.	CHIP MATERIAL	LENS COLOR
SIR	GaAlAs	Blue

5mm Infrared LED,T-1 3/4

MODEL NO : SIR333

Package Dimensions :

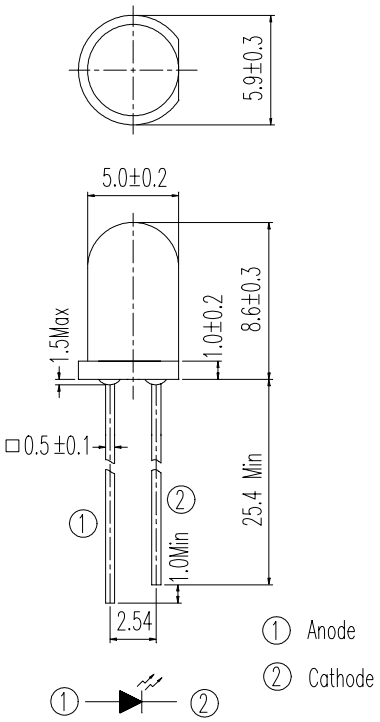

Notes :

1.All dimensions are in millimeter.

2.General tolerance：± 0.1mm.

3.Protruded resin under flange 1.5 mm Max.

4.Lead spacing is measured where the lead emerge from the package.

5.Lens color：. Blue transparent.

6.Above specification may be changed without notice. EVERLIGHT will reserve authority on material change for above specification.

7.These specification sheets include materials protected under copyright of EVERLIGHT corporation . Please don't reproduce or cause anyone to reproduce them without EVERLIGHT's consent.

8.When using this product , please observe the absolute maximum ratings and the instructions for use outlined in these specification sheets. EVERIGHT assumes no responsibility for any damage resulting from use of the product which does not comply with the absolute maximum ratings and the instructions included in these specification sheets.

5mm Infrared LED,T-1 3/4

MODEL NO : SIR333

■ Absolute Maximum Ratings at T_A = 25℃

Parameter	Symbol	Rating	Unit	Notice
Continuous Forward Current	I_F	100	mA	
Peak Forward Current Pulse width=100 μs,Duty cycle=1%	I_{FP}	1.0	A	
Reverse Voltage	V_R	5	V	
Operating Temperature	Topr	-40 ~ +85	℃	
Storage Temperature	Tstg	-40 ~ +85	℃	
Soldering Temperature	Tsol	260	℃	4mm from mold body less than 5 seconds
Power Dissipation at(or below) 25℃ Free Air Temperature	Pd	150	mW	

■ Electronic Optical Characteristics :

Parameter	Symbol	Min.	Typ.	Max.	Unit	Condition
Radiant Intensity	Ee	7.8	20	----	mW/sr	I_F=20mA
		----	95	----		I_F=100mA,tp=100 μs, t_P/T=0.01
		----	920	----		I_F=1A,tp=100 μs, t_P/T=0.01
Peak Wavelength	λ_P	----	875	----	nm	I_F=20mA
Spectral Bandwidth	Δλ	----	80	----	nm	I_F=20mA
Forward Voltage	V_F	----	1.3	1.6	V	I_F=20mA
		----	1.4	1.8		I_F=100mA,tp=100 μs, t_P/T=0.01
		----	2.6	4.0		I_F=1A,tp=100 μs, t_P/T=0.01
Reverse Current	I_R	----	----	10	μA	V_R=5V
View Angle	2Θ1/2	----	20	----	deg	I_F=20mA

5mm Infrared LED,T-1 3/4

MODEL NO : SIR333

■ Typical Electrical/Optical/Characteristics Curves

Fig.1 Forward Current vs. Ambient Temperature

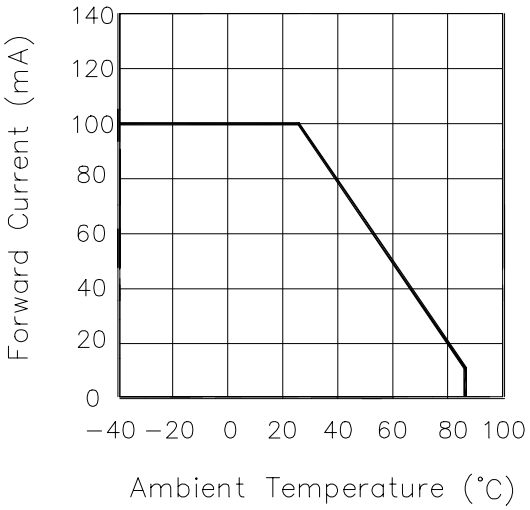

Fig.2 Spectral Distribution

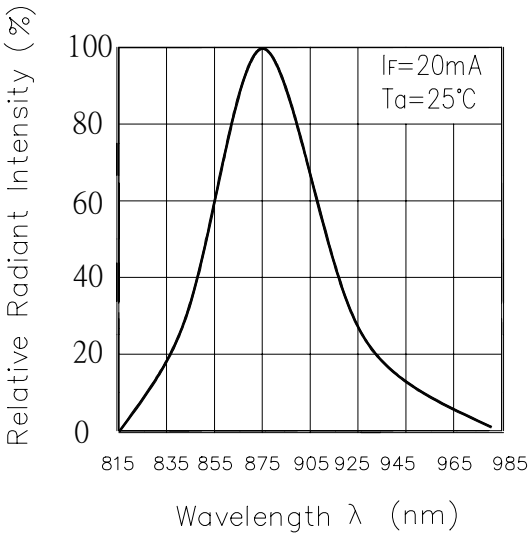

Fig.3 Peak Emission Wavelength vs. Ambient Temperature

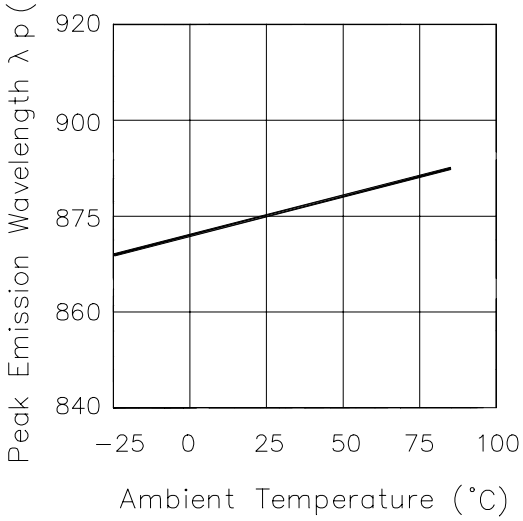

Fig.4 Forward Current vs. Forward Voltage

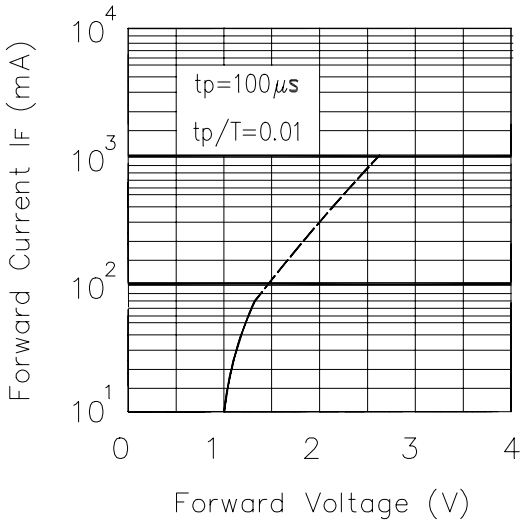

5mm Infrared LED,T-1 3/4

MODEL NO : SIR333

■ Typical Electrical/Optical/Characteristics Curves

Fig. 5 Relative Intensity vs. Forward Current

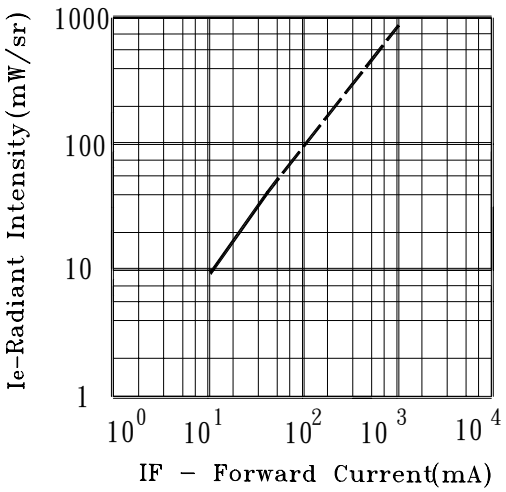

Fig. 6 Relative Radiant Intensity vs. Angular Displacement

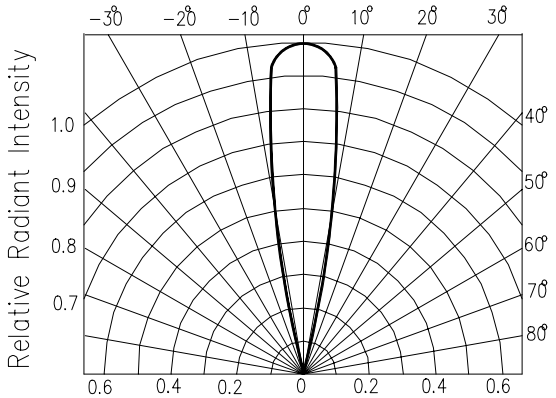

Fig. 7 Relative Intensity vs. Ambient Temperature (℃)

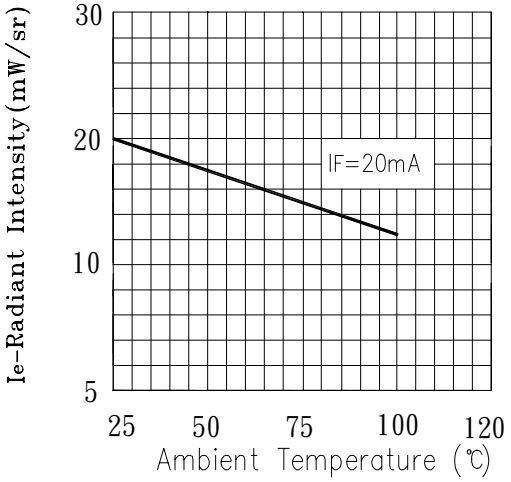

Fig. 8 Forward Current vs. Ambient Temperature (℃)

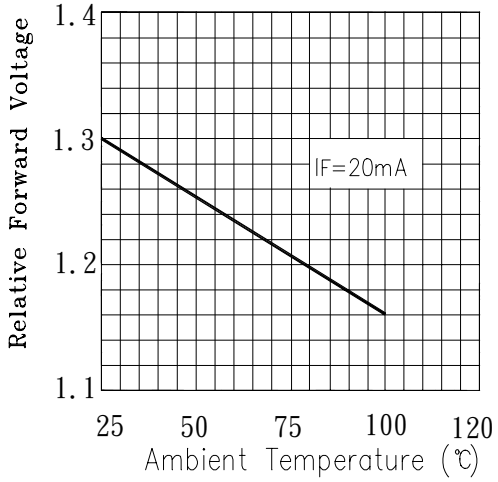

5mm Infrared LED,T-1 3/4

MODEL NO : SIR333

■ Reliability Test Item And Condition

The reliability of products shall be satisfied with items listed below.
Confidence level:90%
LTPD:10%

NO.	Item	Test Conditions	Test Hours/ Cycles	Sample Sizes	Failure Judgement Criteria	Ac/Re
1	**Solder Heat**	TEMP : 260℃ ± 5 ℃	10 secs	22 pcs	$I_R \geqq U \times 2$ $Ee \leqq L \times 0.8$ $V_F \geqq U \times 1.2$ U :Upper specification limit L :Lower specification limit	0/1
2	**Temperature Cycle**	H : +85℃ 30 mins ↕ 5 mins L : -55℃ 30 mins	50 cycles	22 pcs		0/1
3	**Thermal Shock**	H : +100℃ 5 mins ↕ 10 secs L : -10℃ 5 mins	50 cycles	22 pcs		0/1
4	**High Temperature Storage**	TEMP. : +100℃	1000 hrs	22 pcs		0/1
5	**Low Temperature Storage**	TEMP. : -55℃	1000 hrs	22 pcs		0/1
6	**DC Operating Life**	I_F=20mA	1000 hrs	22 pcs		0/1
7	**High Temperature / High Humidity**	85℃ / 85% R.H.	1000 hrs	22 pcs		0/1

5mm Infrared LED,T-1 3/4

MODEL NO : SIR333

Test Method For Power :

Condition : I_F=20 mA

Test Item : Radiant Intensity

Unit : mW/sr

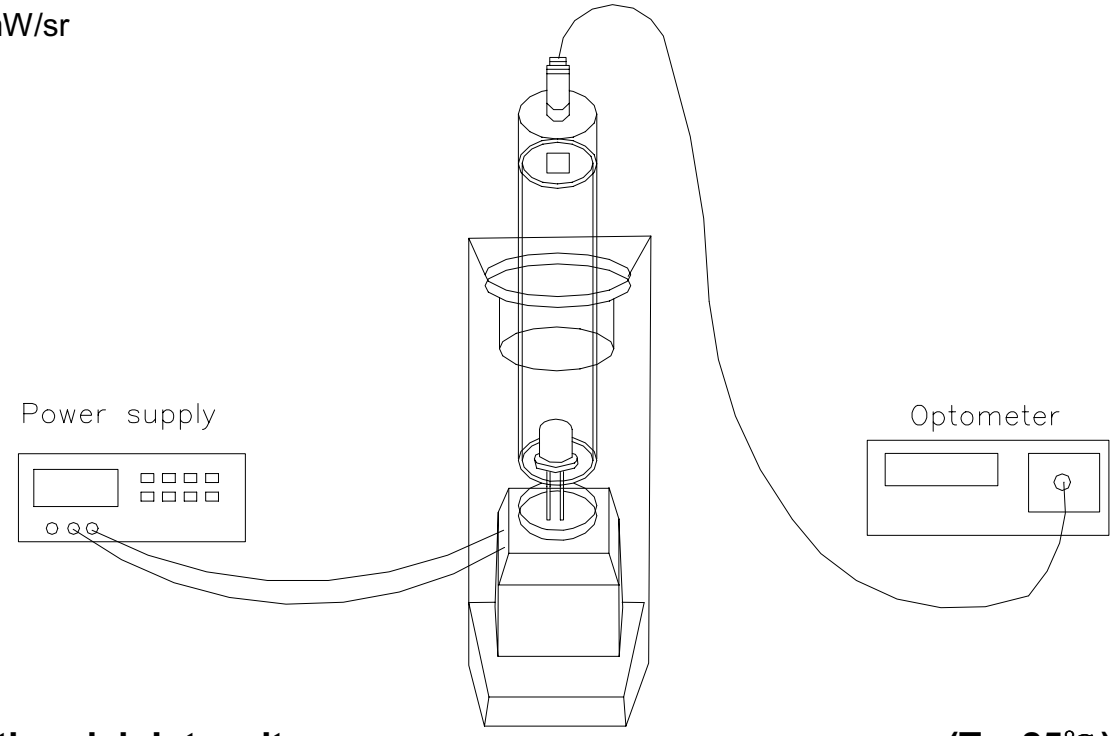

To Distinguish Intensity (Ta=25℃)

Condition : I_F =20m A Unit：mW/sr

Bin Number	M	N	P	Q
Min	7.8	11.0	15.0	21.0
Max	12.5	17.6	24.0	34.0

5mm Infrared LED,T-1 3/4

MODEL NO : SIR333

■ Packing Specifications

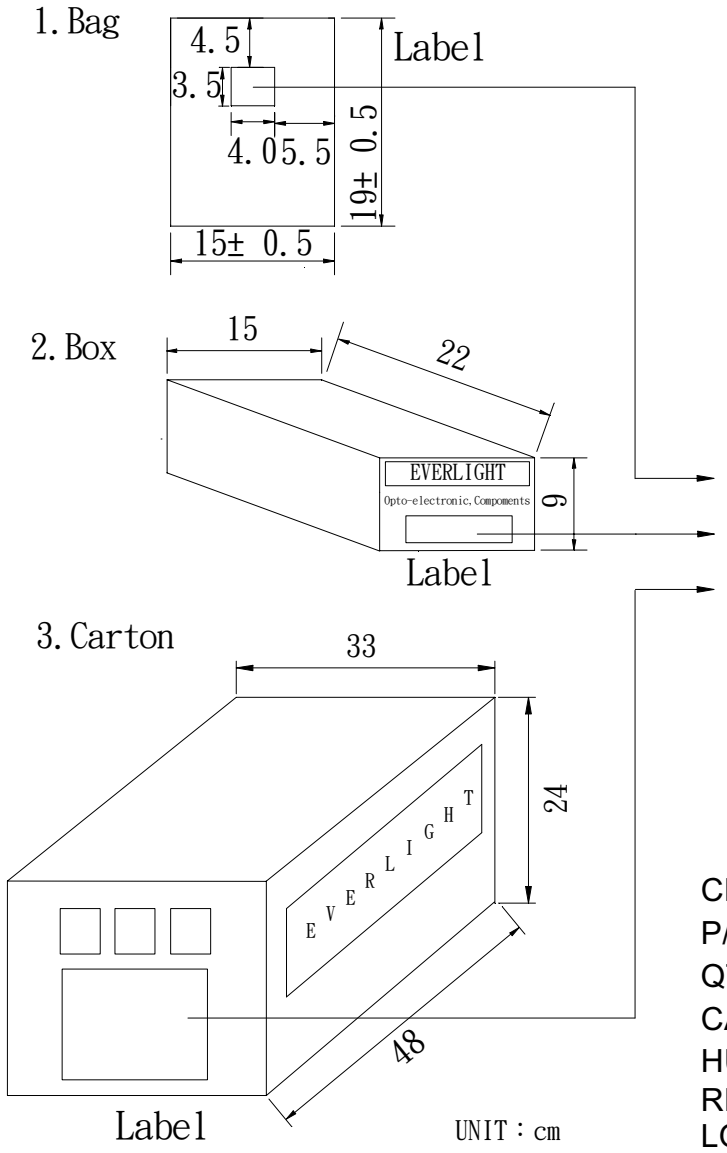

CPN：Customer's Production Number
P/N ：Production Number
QTY：Packing Quantity
CAT：Ranks
HUE：Peak Wavelength
REF : Reference
LOT NO : Lot Number
MADE IN TAIWAN：Production place

■ Packing Quantity Specification

1. 500Pcs/1Bag，6 Bags/1Box
2. 10 Boxes/1Carton